WILLS ROAD
D. N. SHAH
O CALLAGHAN JAS P III & JUDITH CALLAGHAN
AUTO-BRITE, INC
WAFFLE HOUSE, INC
C&M REAL ESTATE VENTURE, LLC
JAMES W. GREEN
JAMES W. GREEN
NORTHFALL OFFICE CONDOMINIUM
ALBERT A. SHAMSI
NORTHFALL OFFICE CONDOMINIUM
NORTHFALL LANE
MANFRED E. KAMMERER & EVA KAMMERED
MANFRED E. KAMMERER & EVA KAMMERED
U STORE IT, LP
V. CLARKE OTTEN
ALPHARETTA PROFESSIONAL PARK CONDOMINIUM
HAROLD A. & PEGGY STEPHENS
HAROLD & PEGGY STEPHENS
TABERNACLE BAPTIST CHURCH
TABERNACLE BAPTIST CHURCH
MCDONALDS CORP.
SOVERIGN AS LLC
ATB ALPHARETTA, LLC
FIRST COLONY BANK
DARRYL J. POLLINGER
CLINTON M. ALSTON & FRANCES B. ALSTON
COLONY PARK, INC
ATLANTA CABLE PARTNERS LP
STATE ROUTE 9
STATE ROUTE 9
WILLS ROAD
WILLS ROAD LLC
KAMBIZ DAMAGHI TR
MSC ALPHARETTA, LLC
THOMAS B. WALLER
DOROTHY N. RALSTON
DOROTHY N. RALSTON
FULTON COUNTY BOARD OF EDUCATION
HUNTIN & HUMMERS, LLC
HUNTIN & HUMMERS, LLC
HUNTIN & HUMMERS, LLC
SOHLIA JAVIDTAJRISHI ASGARI & JALAL ASGARI
ACL GROUP, LLC
KENNETH F & CAROL VORDERMEIER
BRADY PLACE
MAXWELL ROAD
MELBA BEARDEN
COURTNEY W. LAFON & BEVERLY J. HALL
LEWIS J. PERRY
AMILCAR SOLARES
HAROLD A. STEPHENS
N

SIDEWALK
EDGE OF PAVEMENT
PROPERTY LINE
RIGHT OF WAY
EASEMENT
HISTORIC PROPERTY
TRAFFIC SIGNAL
DISPLACEMENT

SR9 OPERATIONAL IMPROVEMENTS AND WIDENING

GDOT PI NOs.
721790 & 721780

JUNE 23, 2015- PHOH

SCALE IN FEET
0 100 200 400

POND
Architects-Engineers-Planners
3500 Parkway Lane
Suite 600
Norcross, Ga. 30092
Phone 678-336-7740
Fax 678-336-7744
Web www.pondco.com

GEORGIA
DEPARTMENT OF TRANSPORTATION
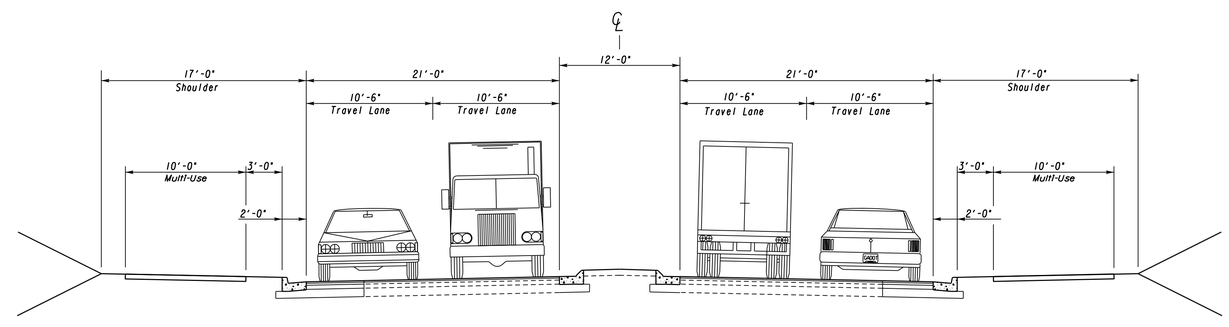
UPPER HEMBREE ROAD TO OLD MILTON PARKWAY